I07990010QN/05-2017

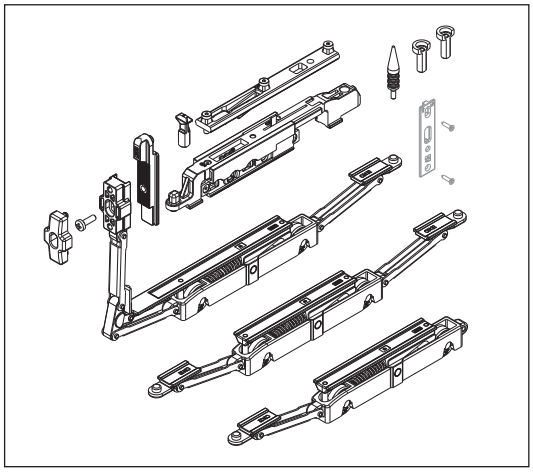

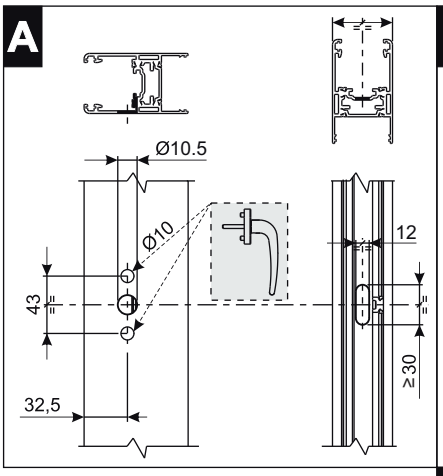

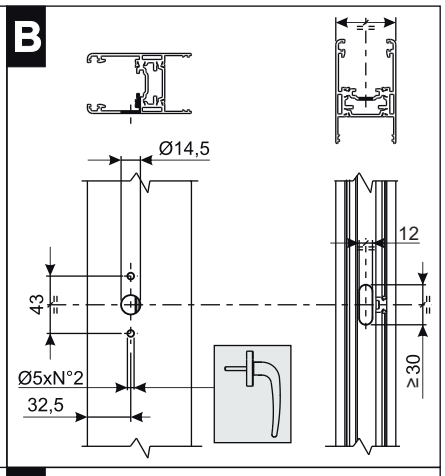

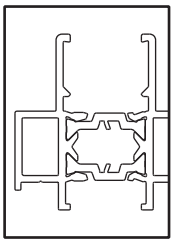

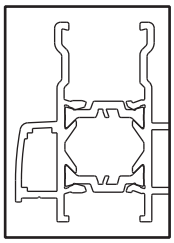

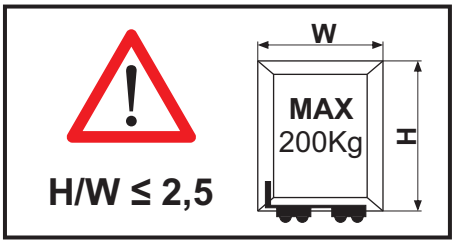

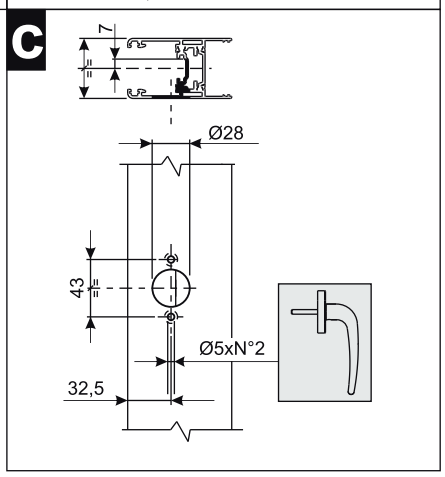

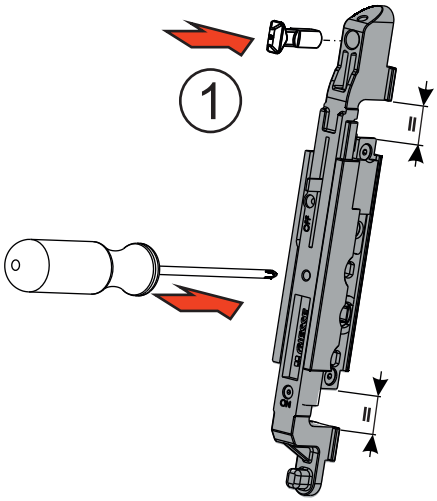

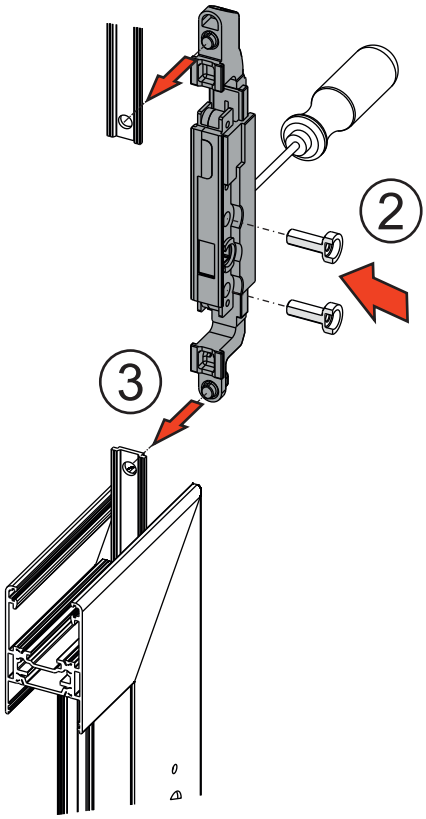

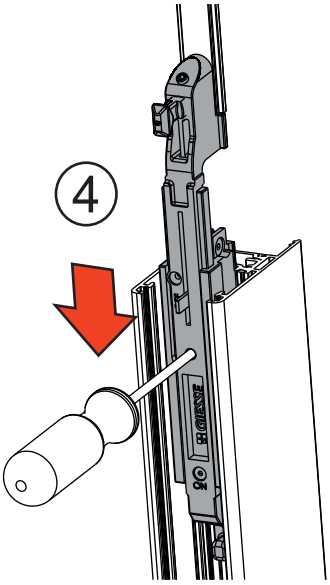

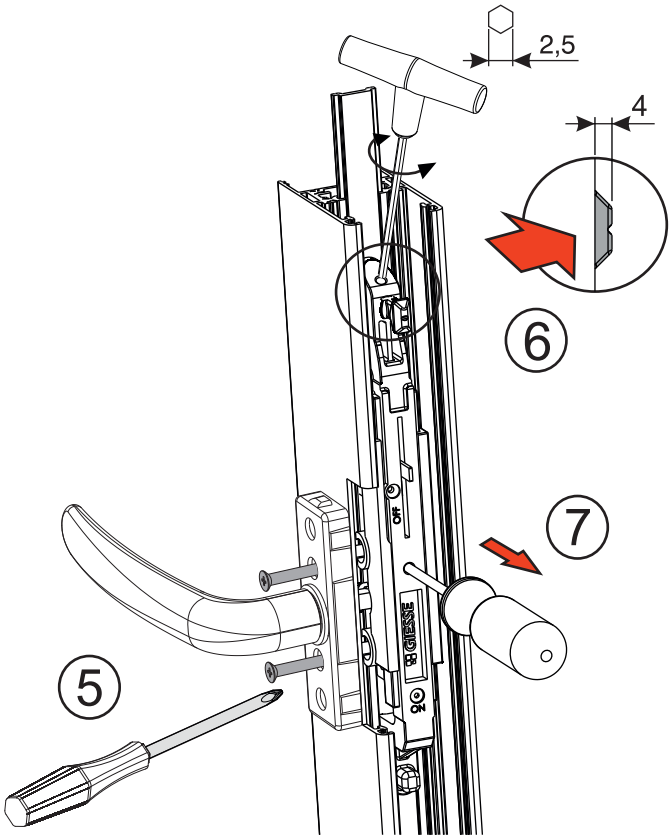

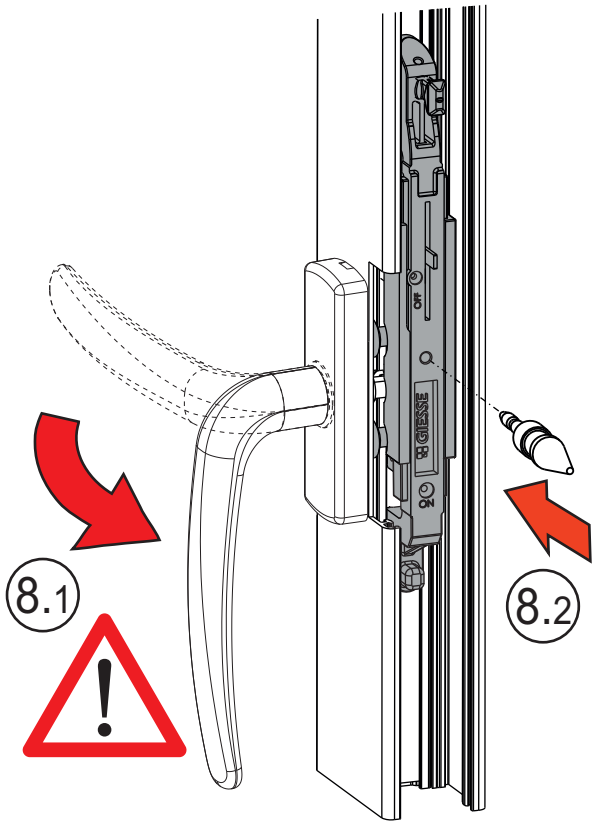
8.1
8.2
OFF
ON
GIESSE

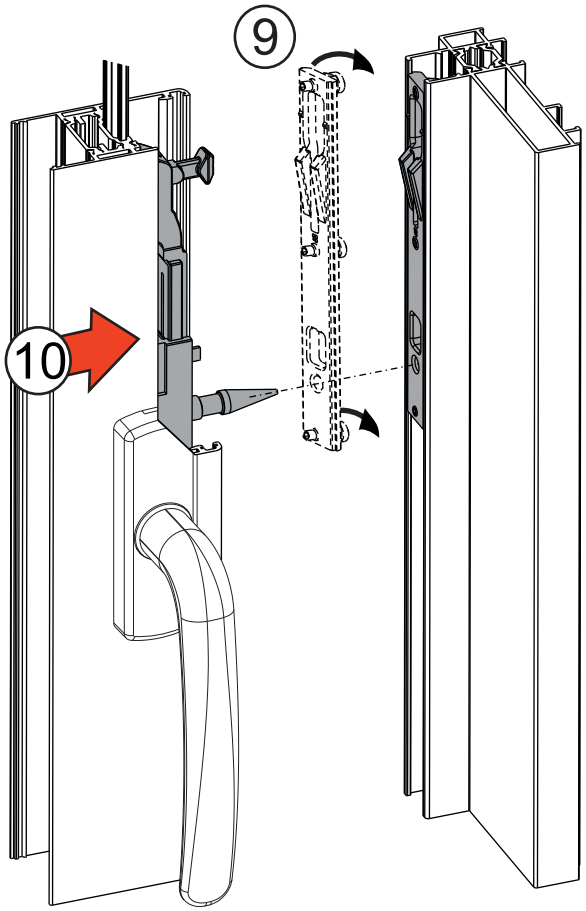
9
10

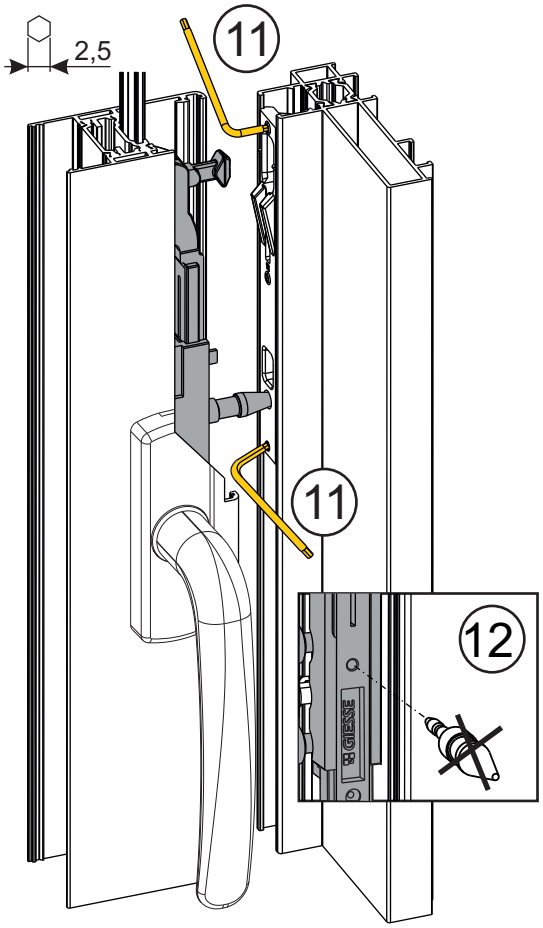
2,5
11
11
12
GIESSE

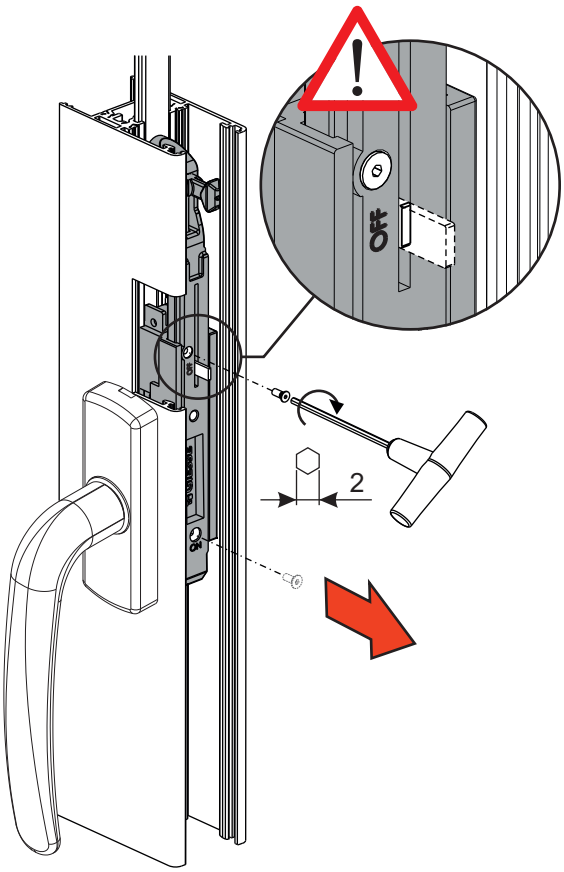
OFF
2

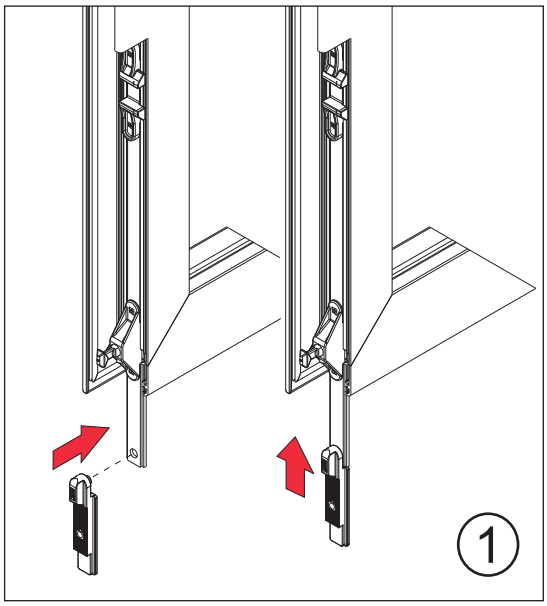
1

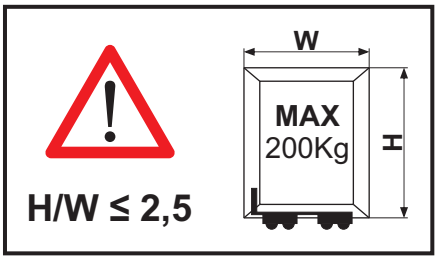
H/W ≤ 2,5
W
MAX
200Kg
H

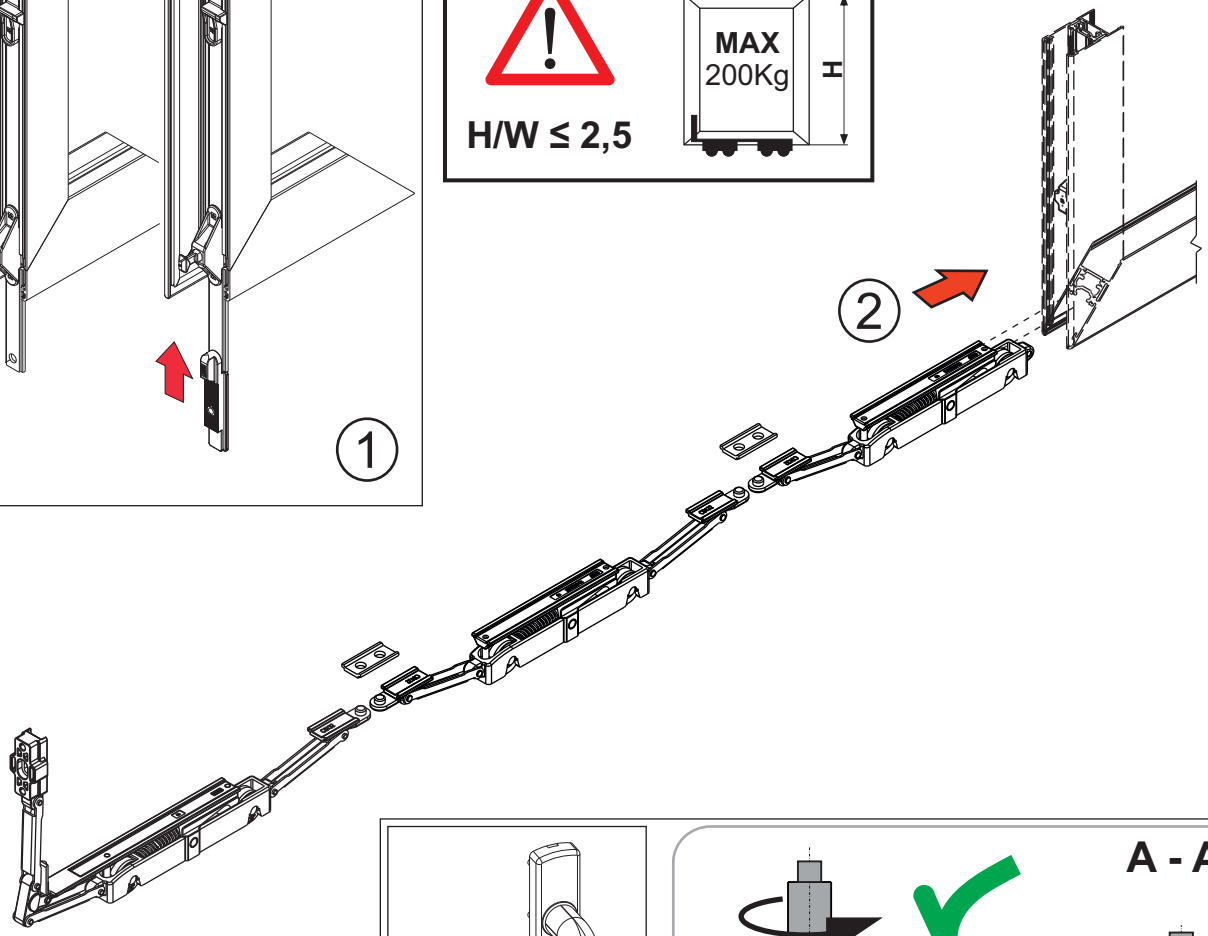
2

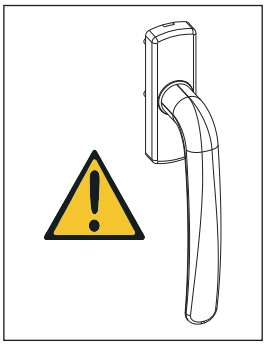

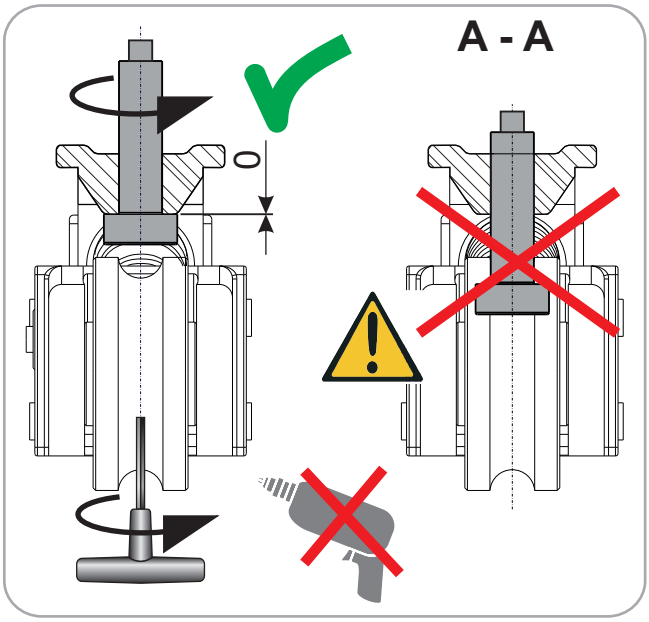
A - A
0

3

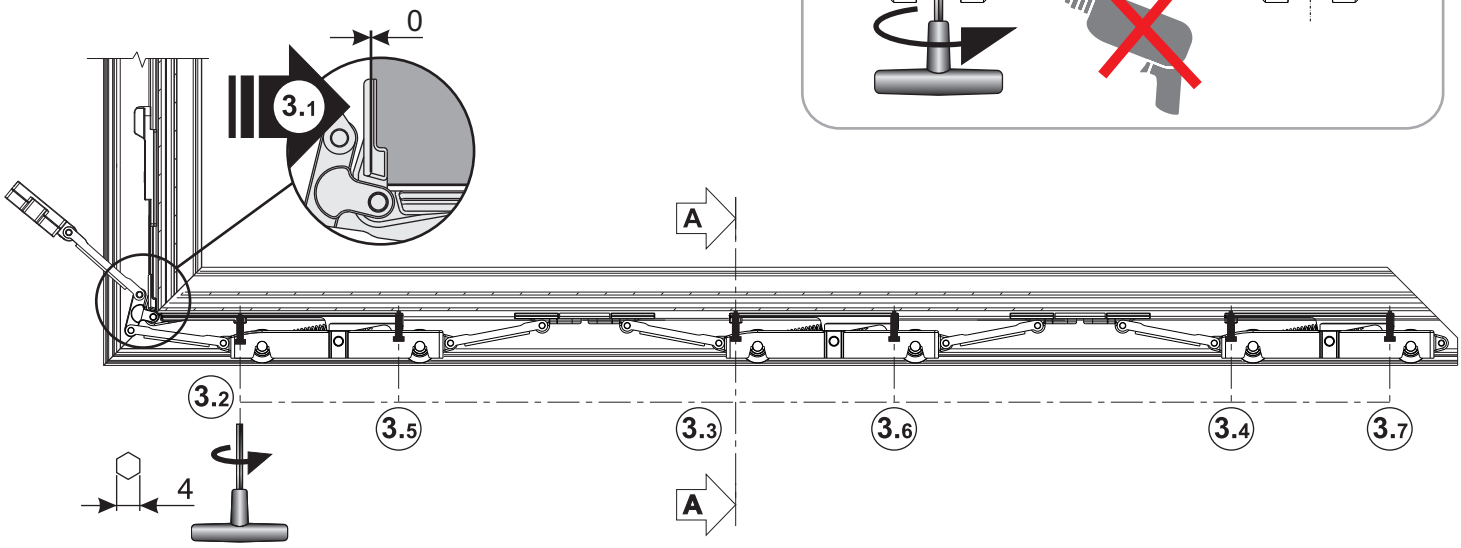
0
3.1
A
3.2
3.5
3.3
3.6
3.4
3.7
4
A

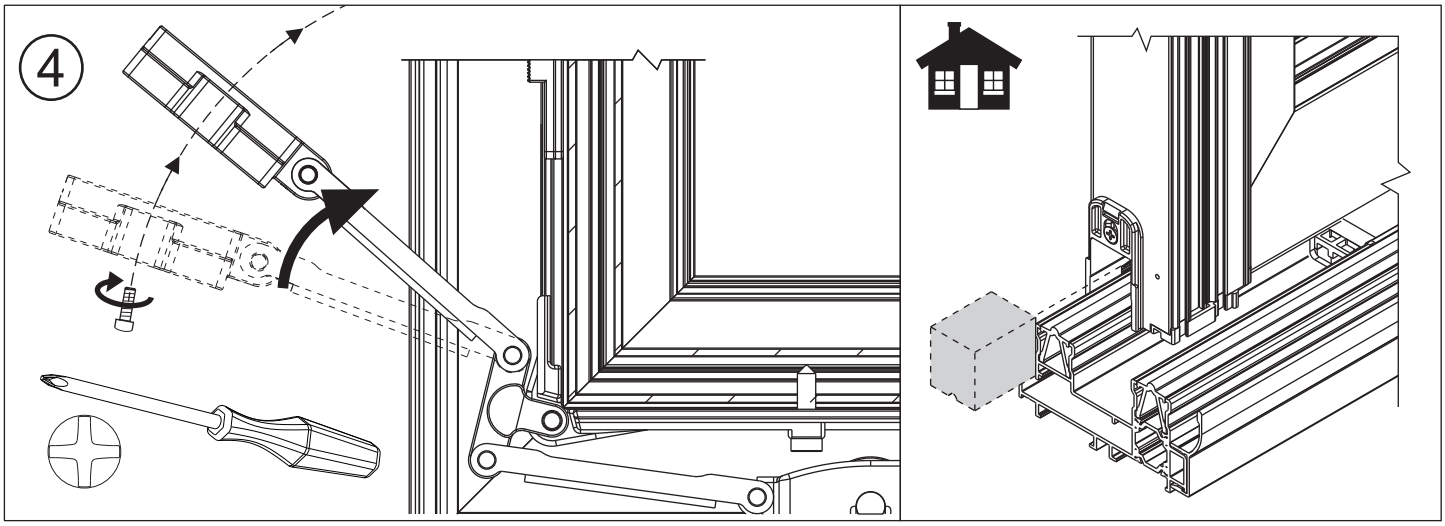
4

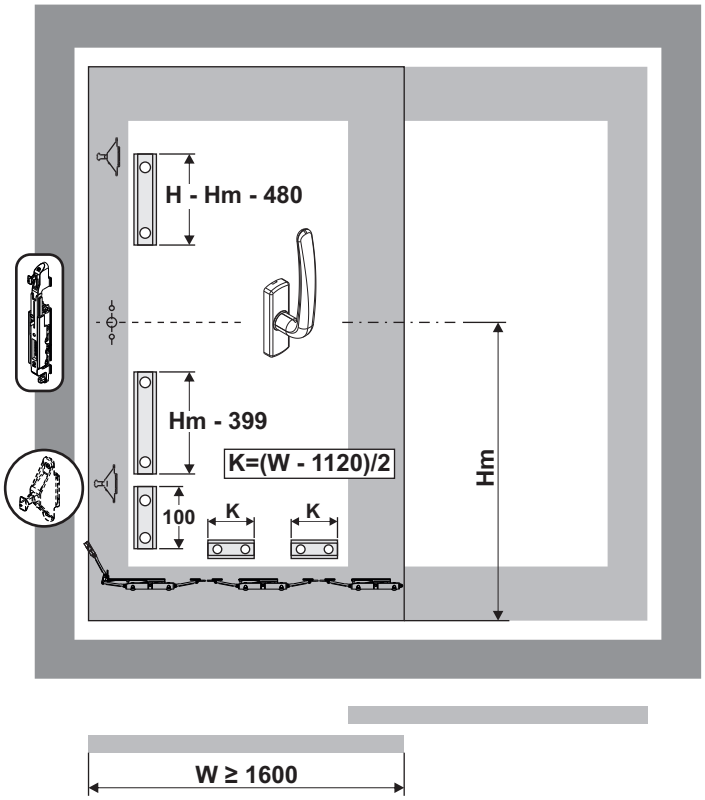
H - Hm - 480
Hm - 399
K=(W - 1120)/2
100
K
K
Hm
W ≥ 1600

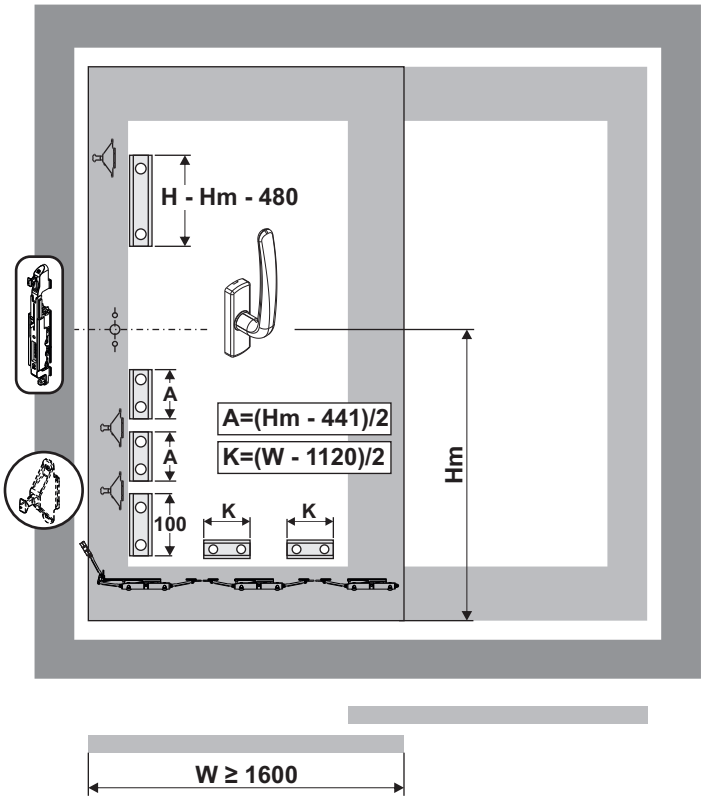
H - Hm - 480
A
A
A=(Hm - 441)/2
K=(W - 1120)/2
100
K
K
Hm
W ≥ 1600

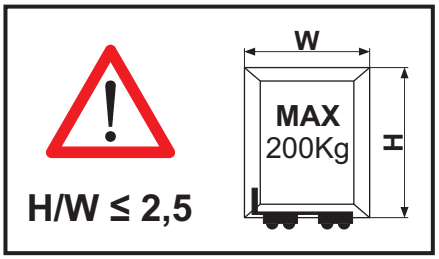
H/W ≤ 2,5
W
MAX
200Kg
H

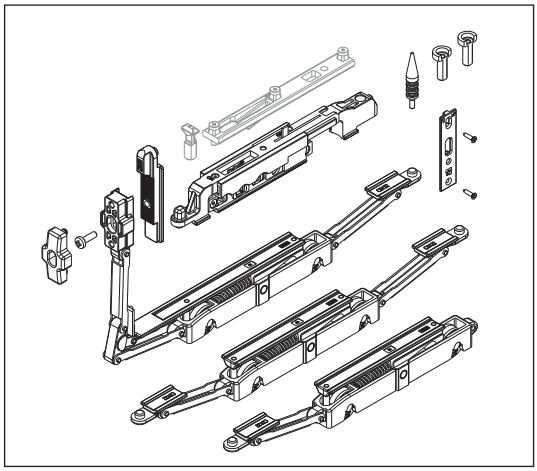

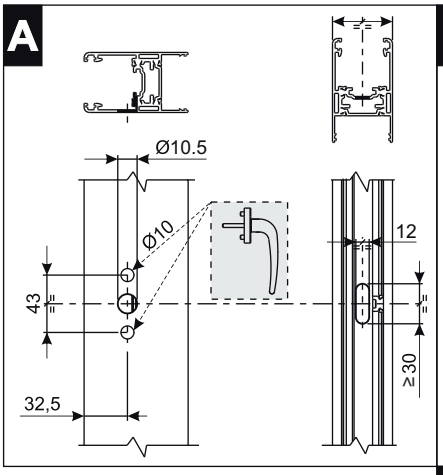
A
Ø10.5
Ø10
12
43
32,5
≥30

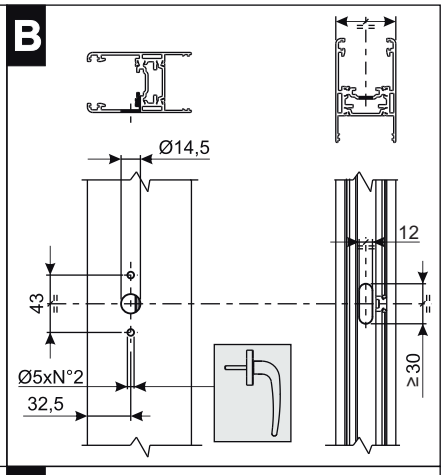
B
Ø14,5
12
43
Ø5xN°2
32,5
≥30

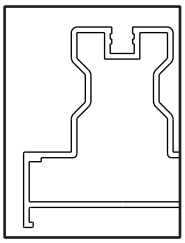

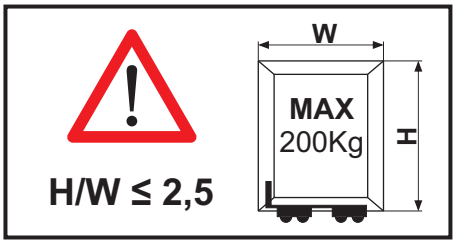
H/W ≤ 2,5
W
MAX
200Kg
H

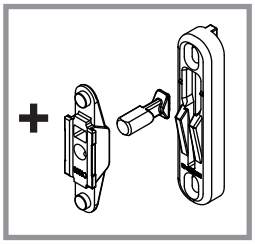

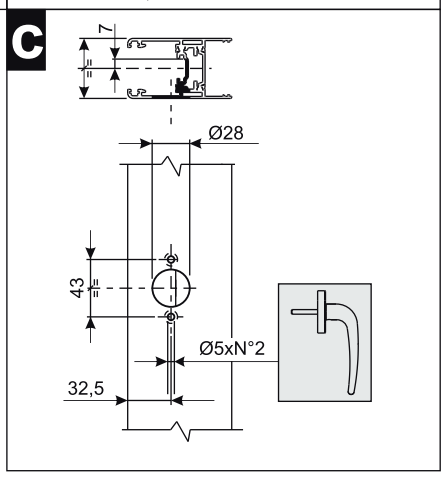
C
7
Ø28
43
Ø5xN°2
32,5

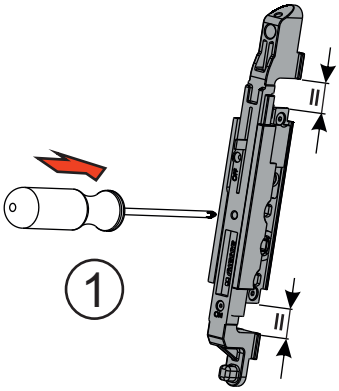
1

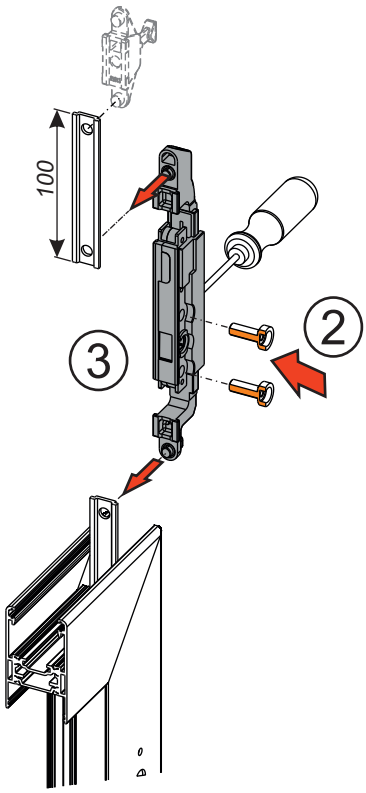
100
2
3

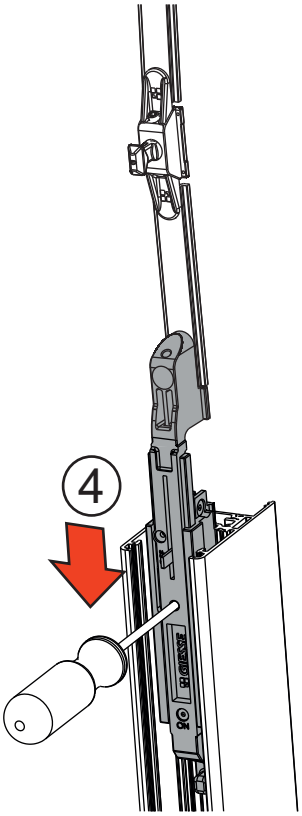
4

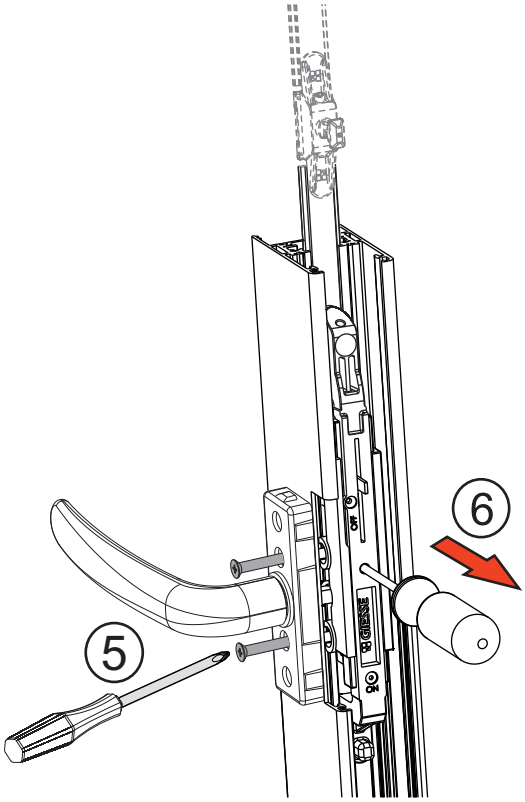
5
6

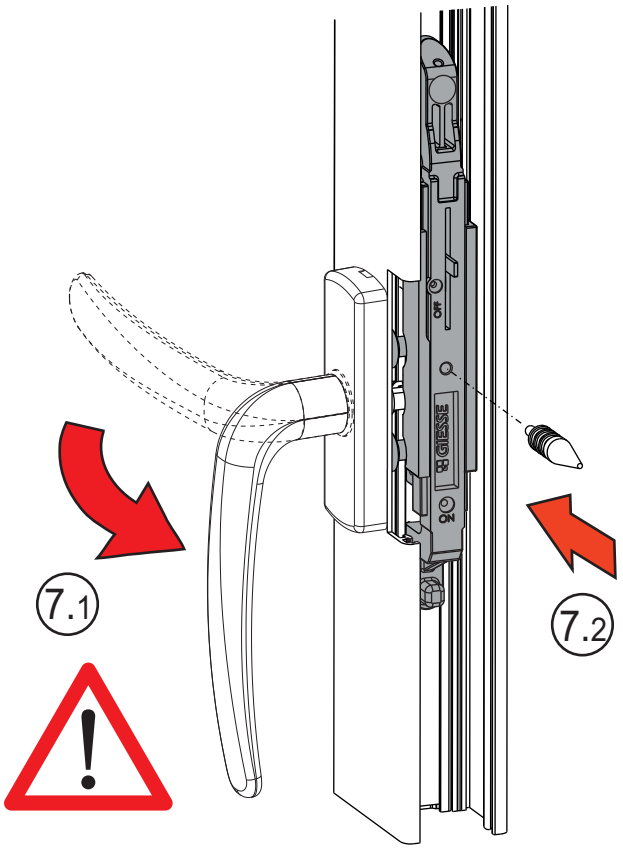
7.1
7.2
OFF
ON
GIESSE

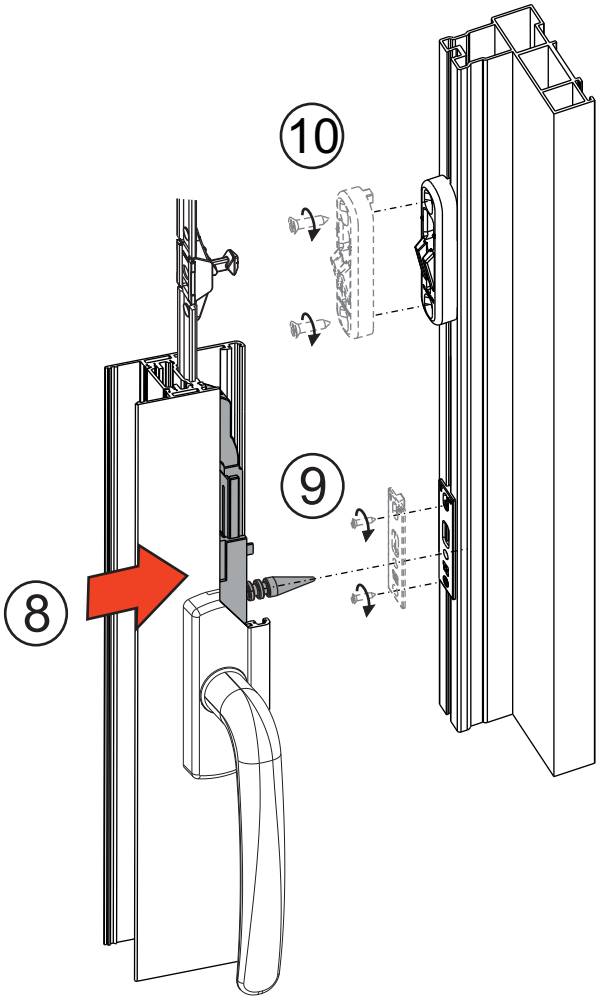
10
9
8

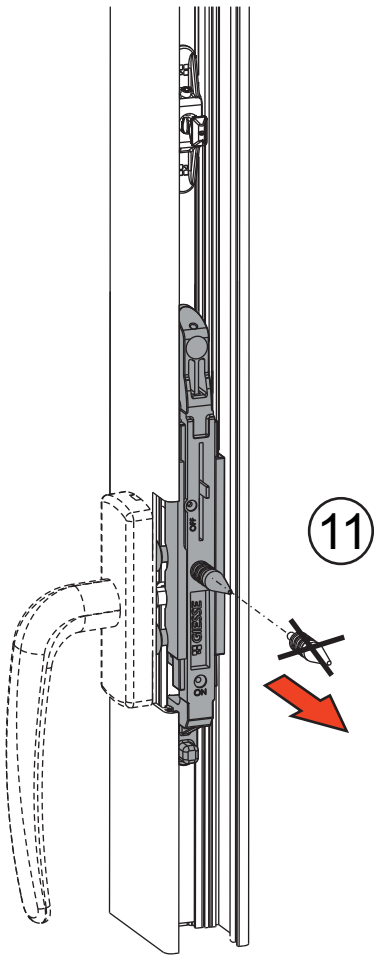
11
OFF
ON
GIESSE

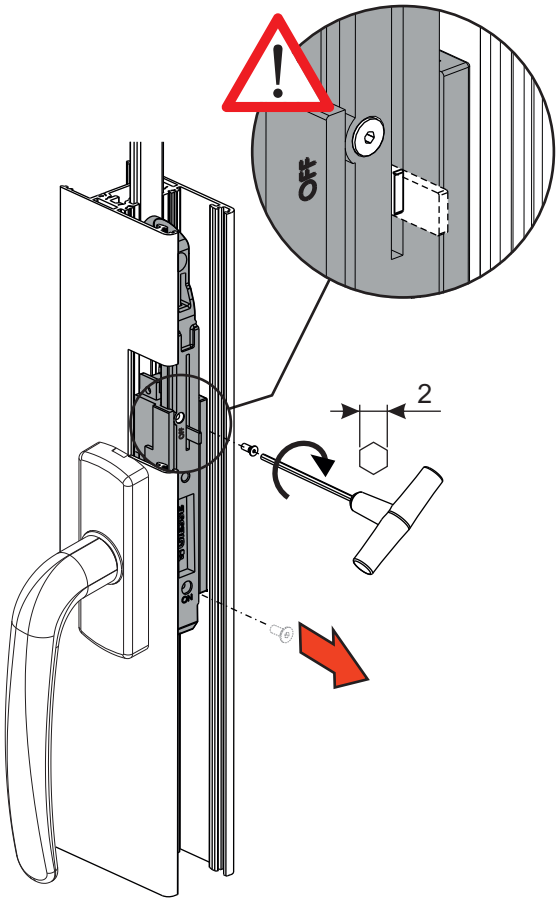
OFF
2

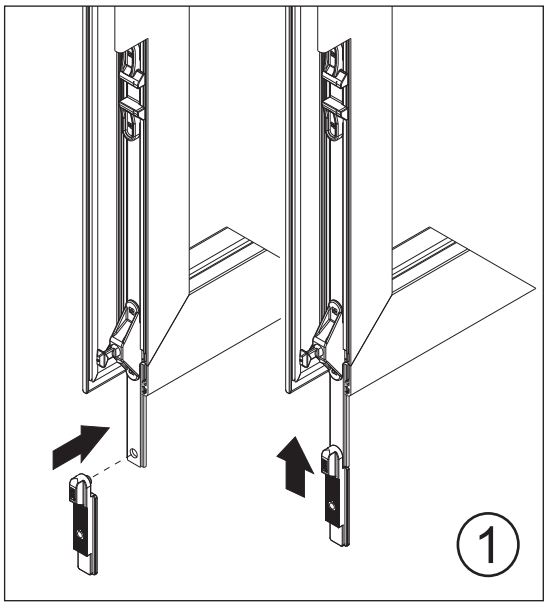
1

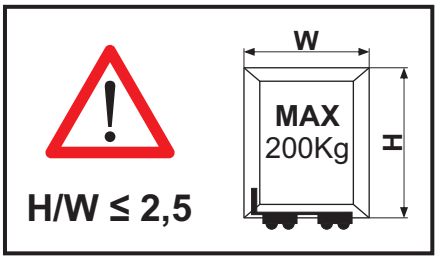
H/W ≤ 2,5
W
MAX
200Kg
H

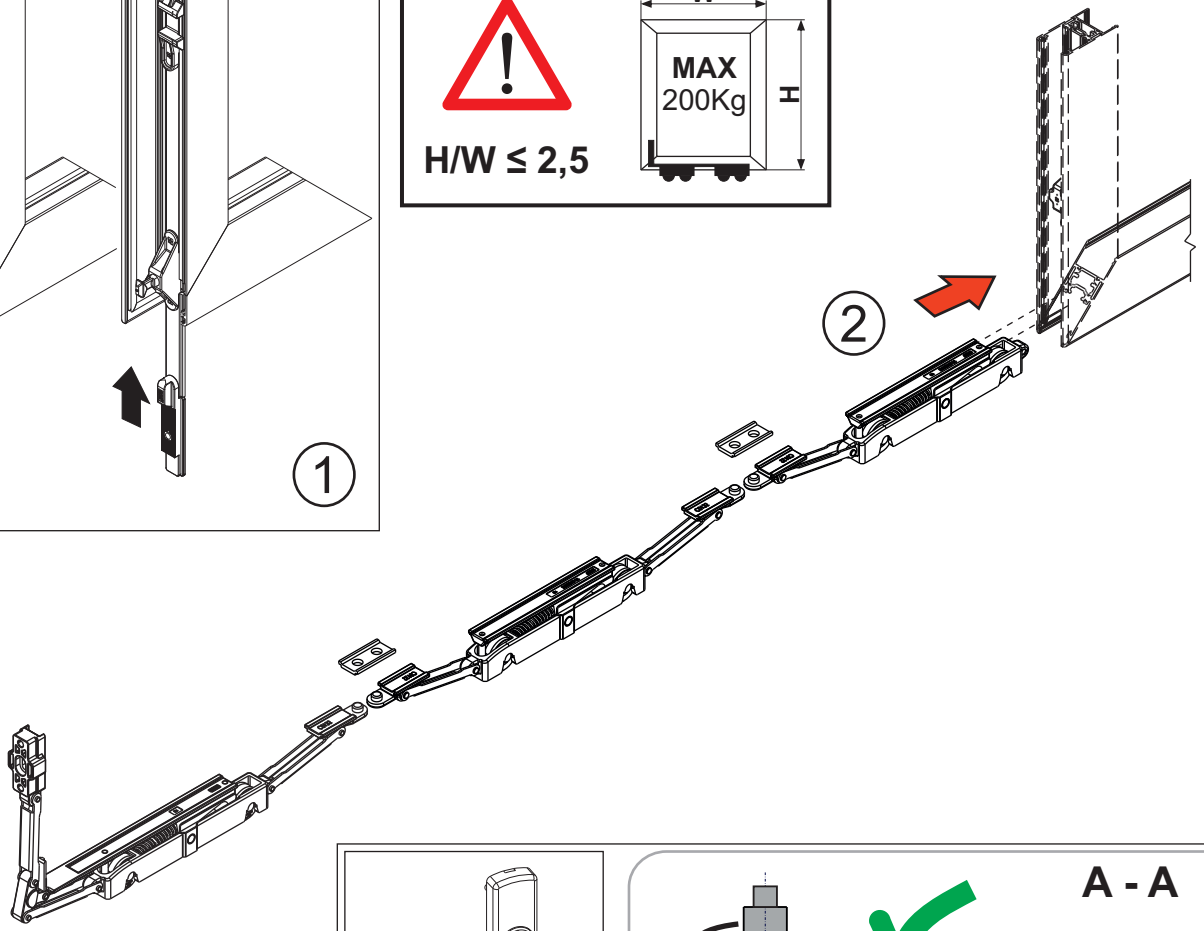
2

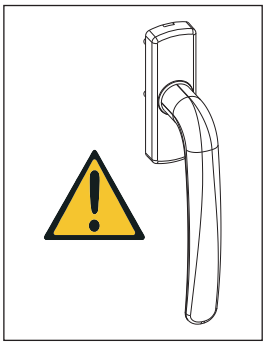

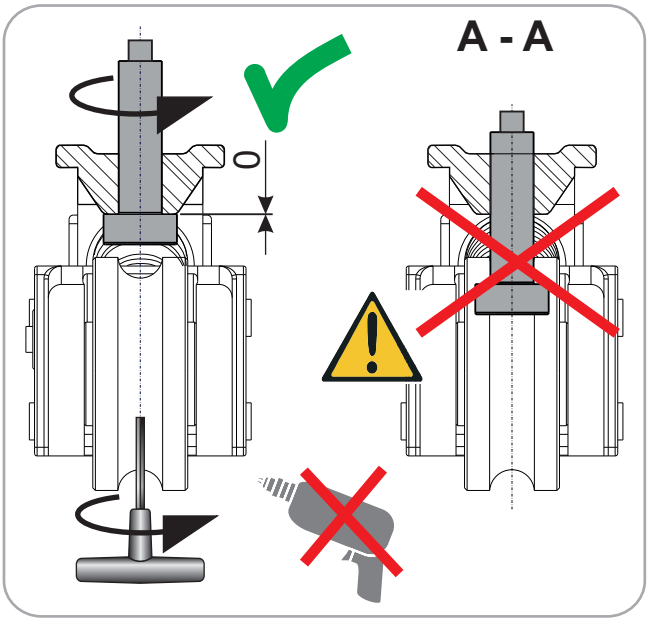
A - A
0

3

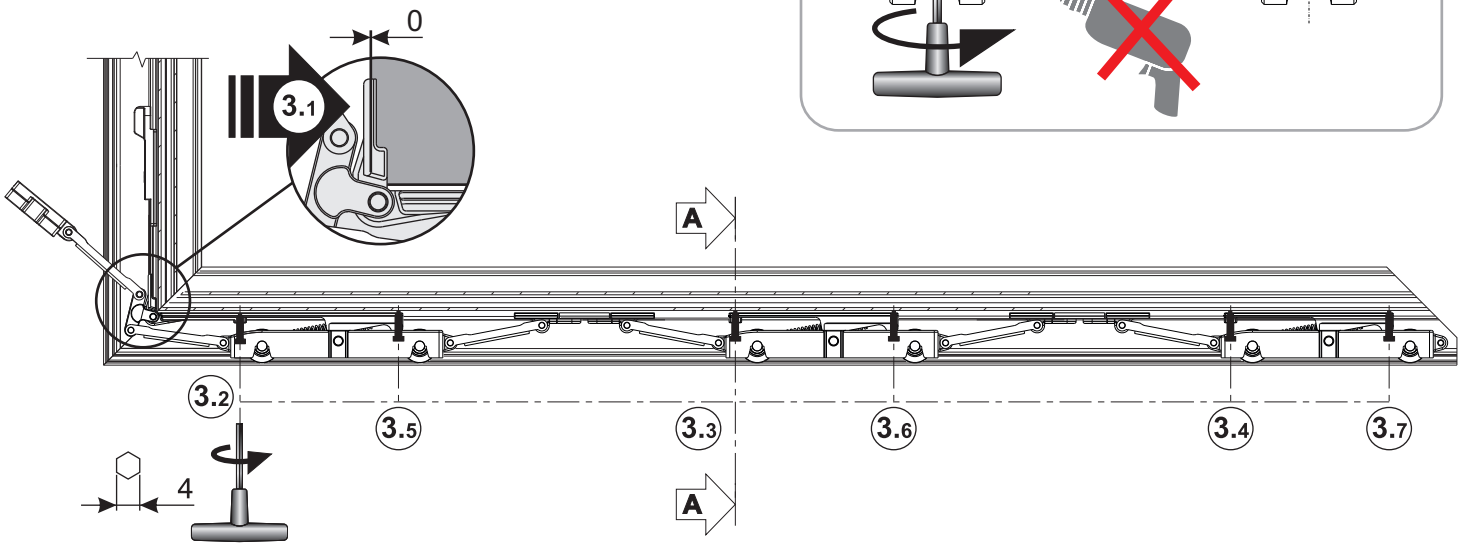
0
3.1
A
3.2
3.5
3.3
3.6
3.4
3.7
4
A

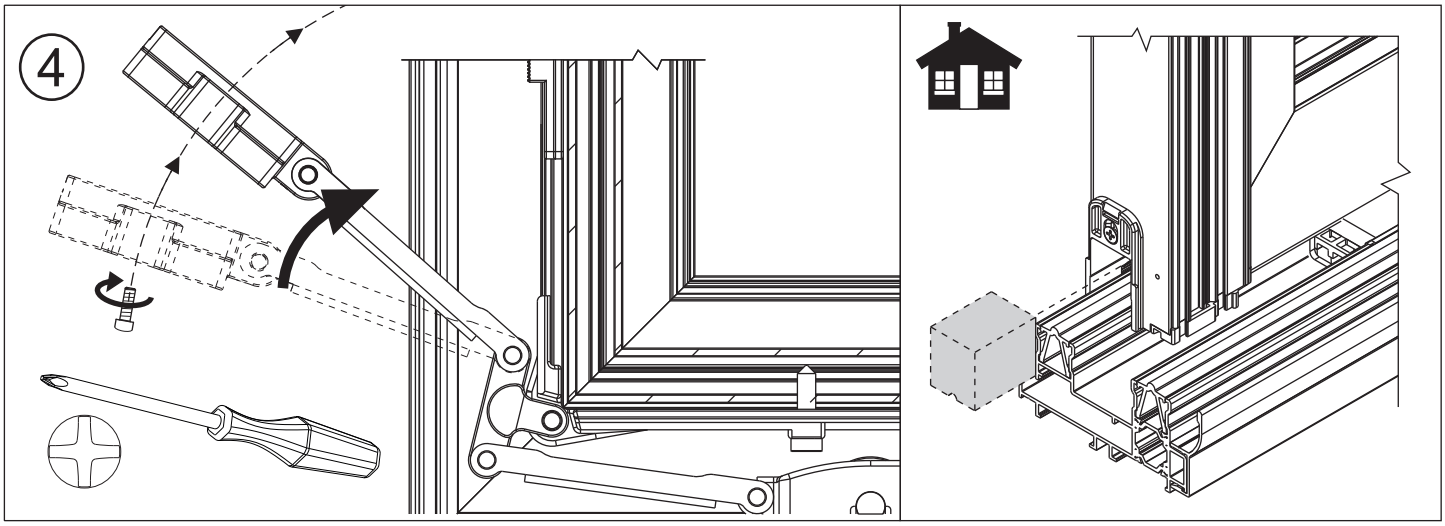
4

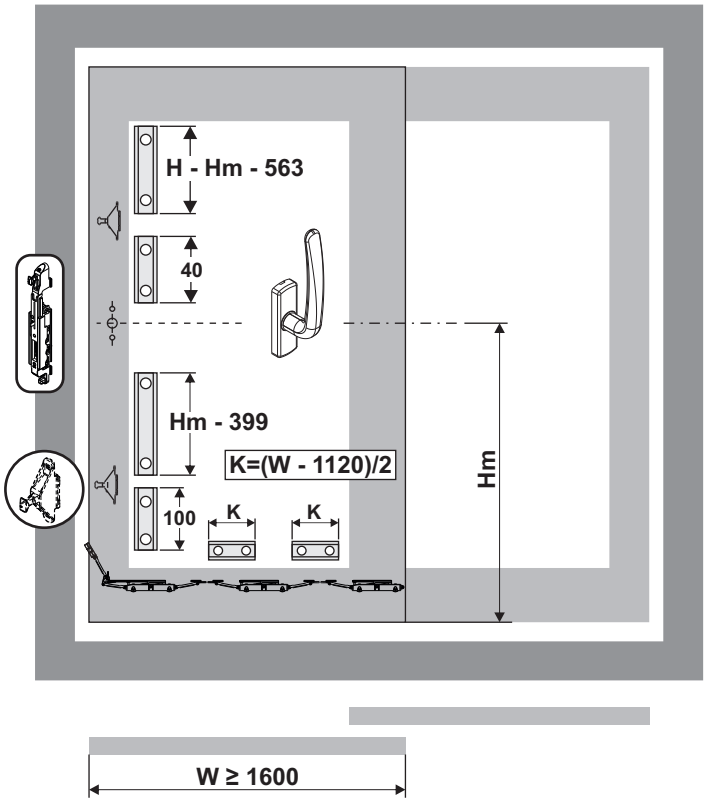
H - Hm - 563
40
Hm - 399
K=(W - 1120)/2
100
K
K
Hm
W ≥ 1600

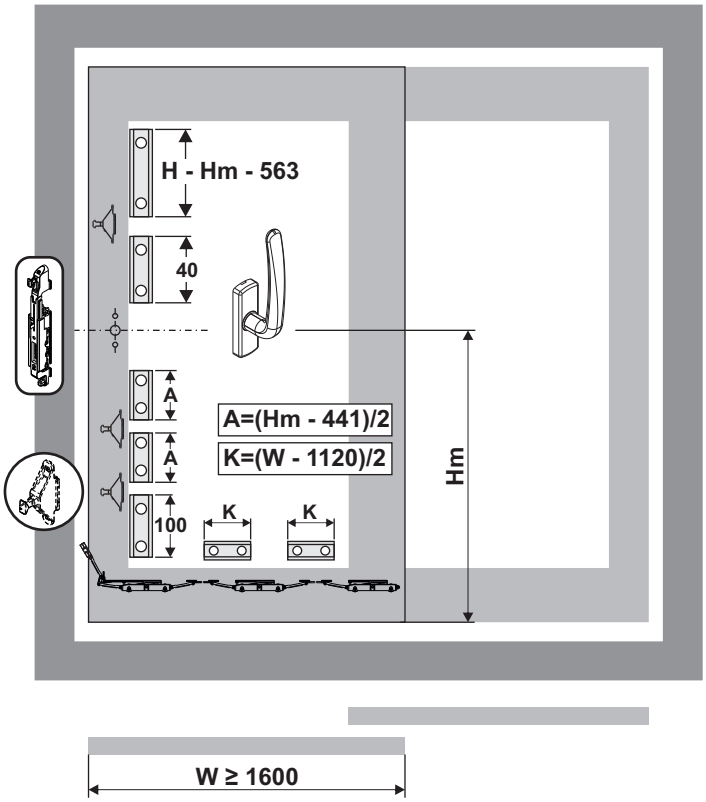
H - Hm - 563
40
A
A
A=(Hm - 441)/2
K=(W - 1120)/2
100
K
K
Hm
W ≥ 1600

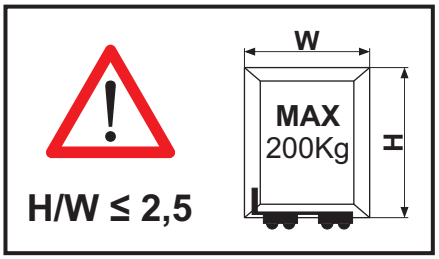
H/W ≤ 2,5
W
MAX
200Kg
H